SOLIS ROLLER BLINDS

Extremely effective window treatment for controlling the entry of light and warmth from the sun while not inhibiting the advantages of large expanses of glass.

- Our exclusive range of textiles offer the best compromise between visibility and light transmission while providing incomparable dimensional stability and ease of maintenance.
- Air conditioning savings can be as much as 20-30% per year allowing for less powerful cooling, air conditioning and heating installations.
- Solis Roller Blind System is easily integrated into the aesthetics of any commercial building or high quality residential project, due to the extensive range of textiles available.
- Dual action mechanism partnered with continuous stainless steel ball chain operates in such a way that it only applies the precise braking power necessary to keep the blind in the desired position.
- "New" metalised textiles filter 97% of UV penetration without losing visual contact with the outside world.

SOLIS

SOLIS ROLLER BLIND SPECIFICATIONS

Please note illustrations are not to scale. All measurements are in millimetres. Please contact your Solis Products representative for additional information.

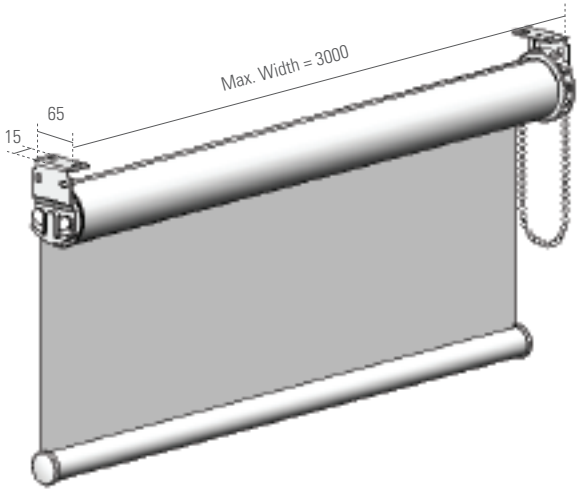

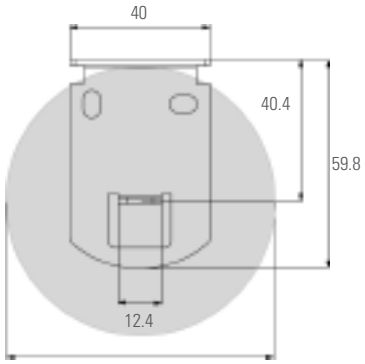

Maximum Roll Size 77mm

Control End

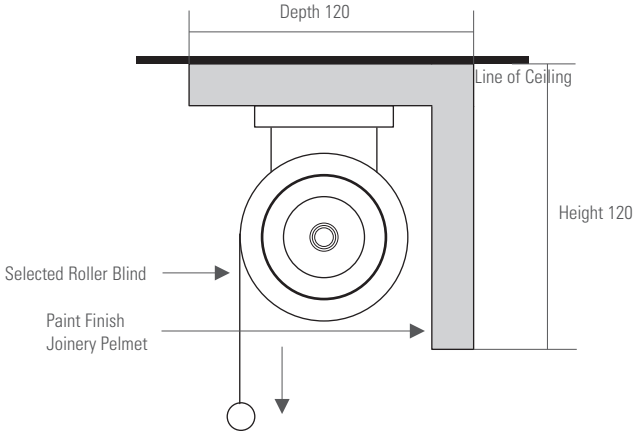

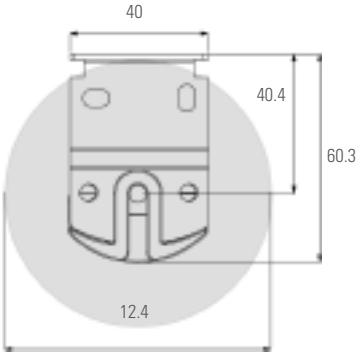

Maximum Roll Size 77mm

Idle End

AVAILABLE SIZES

WIDTH	3000mm max. - 500mm min.
DROP	3000mm max. - 500mm min.

FABRIC

MAX AREA	7SqM

TOP ROLLER

MATERIAL	Extruded aluminium
DIAMETER	32/40/45mm
WALL THICKNESS	0.4mm
COLOUR	Clear anodised aluminium

BASE BAR

MATERIAL	Extruded aluminium alloy
DIAMETER	21mm / or 18mm x 36mm
WALL THICKNESS	0.8mm
COLOUR	Clear anodised aluminium or Dulux powder coated

BRACKETS

MATERIAL	Galvanised steel fixing angle with press formed pockets
OPTIONS	Top or face fixing; left or right control
COLOUR	White, black, cream or colour matched
PAINT	Electrostatic powder coated and baked

MECHANISM

TYPE	Chain drive 1:1 ratio Optional 2:1 spring assist mechanism
MECHANISM	Automatic double action mechanism. The braking effect is obtained by means of a cone and disc brake system, which operates in such a way that it only applies the precise braking power necessary to keep the blind in the desired position. The detachable ball chain wheel cover swivels to suit the angle of operation, and it also serves as a stop action device for the blind in its extreme positions.
COLOUR	White, black or cream

CONTROL CHAIN

MATERIAL	316 stainless steel or PVC
COLOUR	White, black or stainless steel

MOTORISATION

TYPE	Tubular motor mounted internally within an aluminium tube
OPTIONS	Motor is complete with in built limit switches and a variety of control options

H/O 190 Willoughby Road, Crows Nest NSW 2065 Australia **P** +61 2 9439 9020 **F** +61 2 9439 9223 **E** info@solisproducts.com